	9	10	11	12	13
H min	1710mm	1900mm	2090mm	2280mm	2470mm
H max	2115mm	2350mm	2585mm	2820mm	3055mm

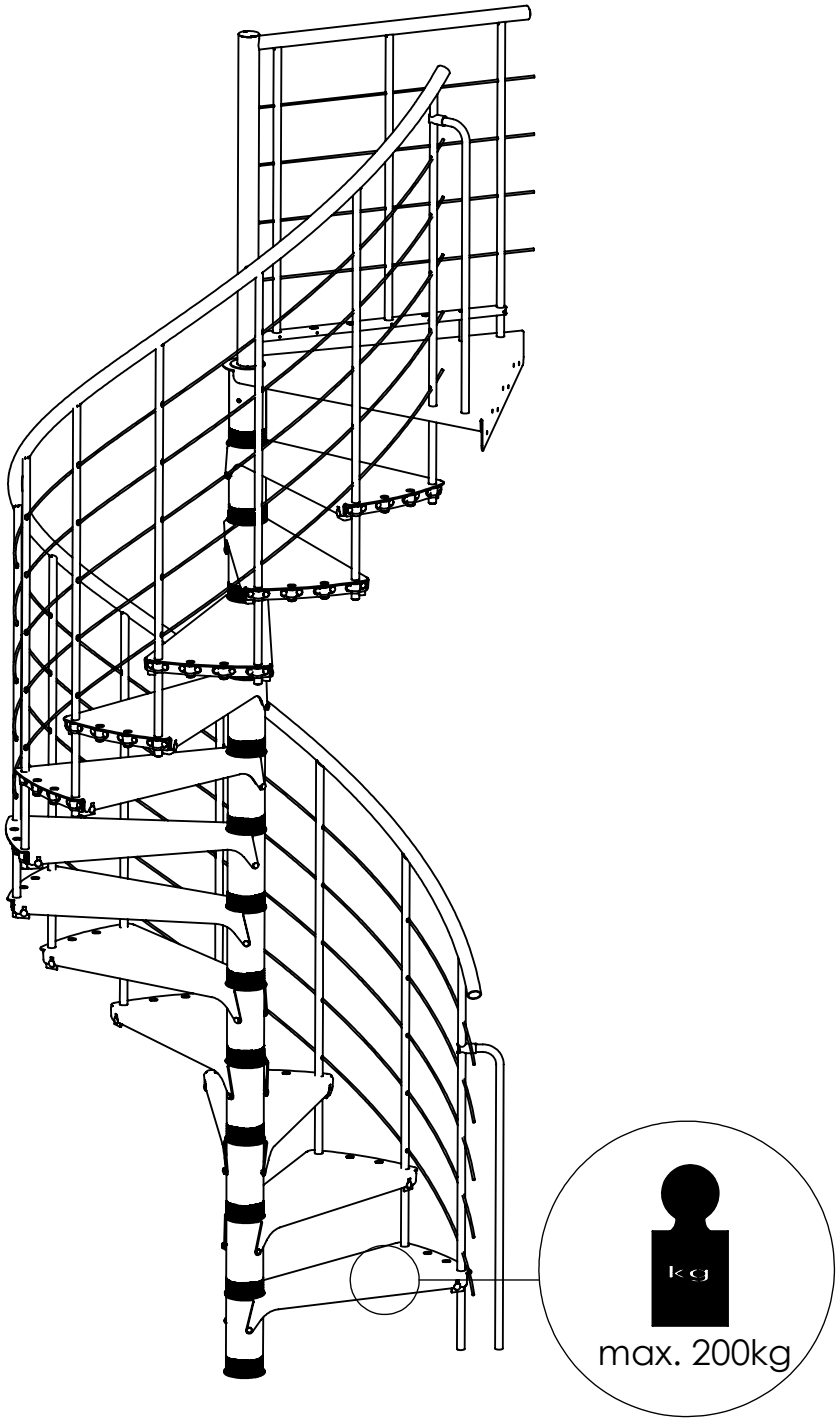

ST02 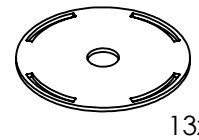 ∅ 115 x 3 mm 13x	ST03  1x	ST05 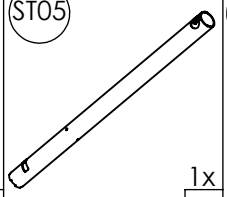 ∅ 60 x 1000x4 mm 1x	ST06 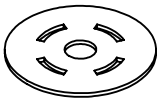 ∅ 100 x 3 mm 1x	ST07 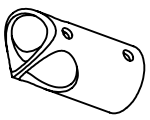 ∅ 28x2x50 mm 2x	ST10 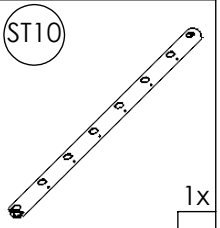 1x
ST12 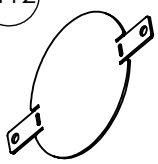 ∅ 60 mm 1x	ST15a 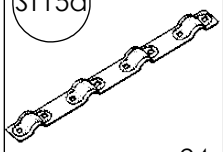 24x	ST15b  4x	ST74 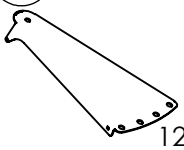 12x	ST75 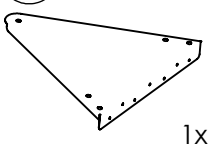 1x	ST76  24x
ST77 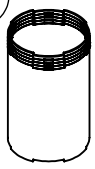 ∅ 108x220 mm 13x	GS01 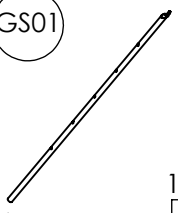 ∅ 22x2x1275 mm 13x	GS03 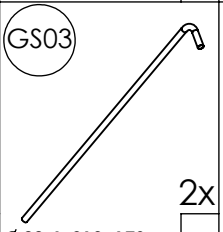 ∅ 22x1x913+170mm 2x	GS02 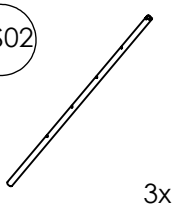 ∅ 22x2x1030 mm 3x	G01 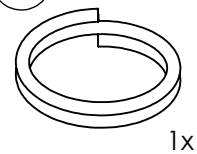 ∅ 40x3x6000mm 1x	G07 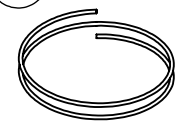 ∅ 6x1x6000mm
G12 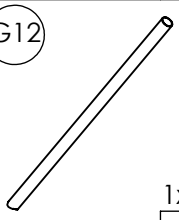 ∅ 40x3x1000 mm 1x	KS01  ∅ 22 mm 17x	KS02 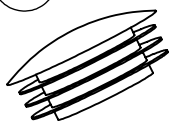 ∅ 40 mm 3x	KS06 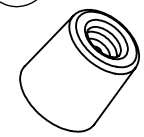 2x	D01 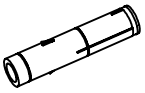 ∅ 12 mm 9x	D03  ∅ 6 mm 2x
NT01 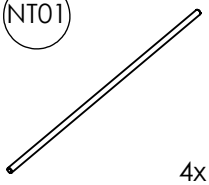 M20 x 1000 mm 4x	NT02 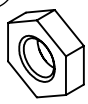 M20 DIN-EN 24035 13x	NT03 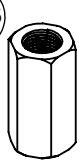 M20 DIN 6334 4x	NT05 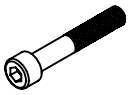 M8x50 mm 4x	NT07  ∅ 4,2 x 19 mm 20x	NT08 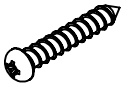 ∅ 4 x 50 mm 2x
NT11  ∅ 4x25mm 46x	NT13  M6 x 16 mm DIN 603 104x	NT20 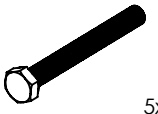 M8x70 mm 5x	NT24  M8 48x	NT26  M8 DIN 125 29x	NT39  M5 DIN 9021 2x
NT40 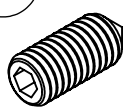 M8x20mm 3x	NT45  M6 DIN 934 104x	NT46 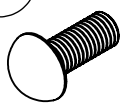 M8 x 30 mm DIN 603 48x	KS05  ∅ 6 x 12 mm 20x		

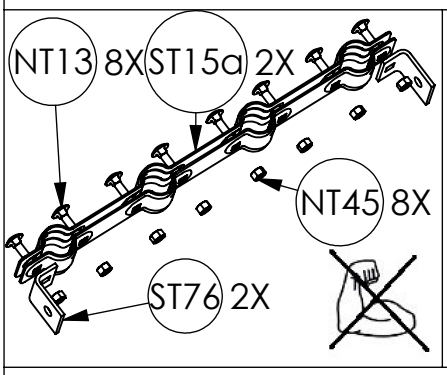
NT13 8X
ST15a 2X
NT45 8X
ST76 2X

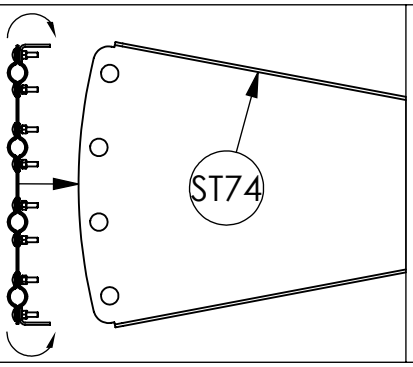
ST74

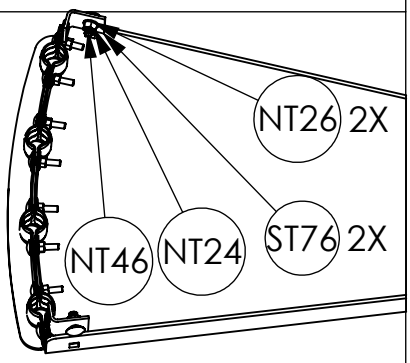
NT26 2X
NT46
NT24
ST76 2X

S1

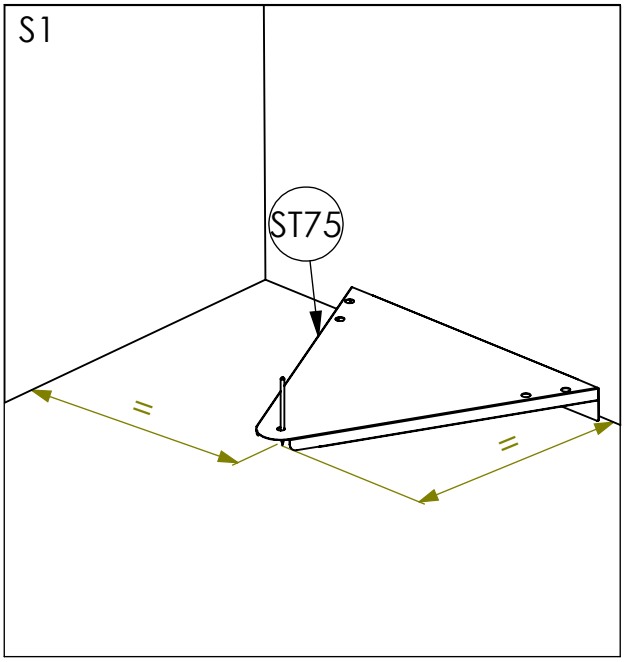
ST75

S2

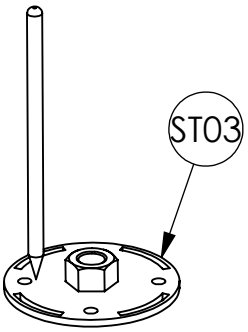
ST03

S3

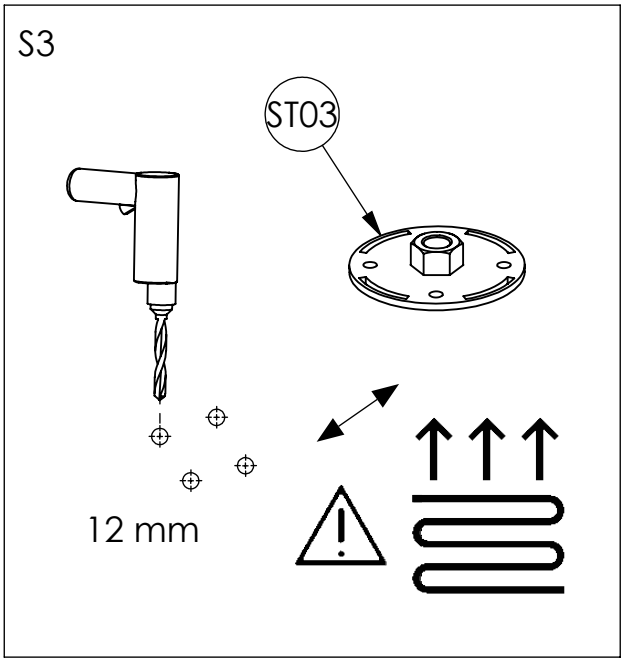
ST03
12 mm

S4

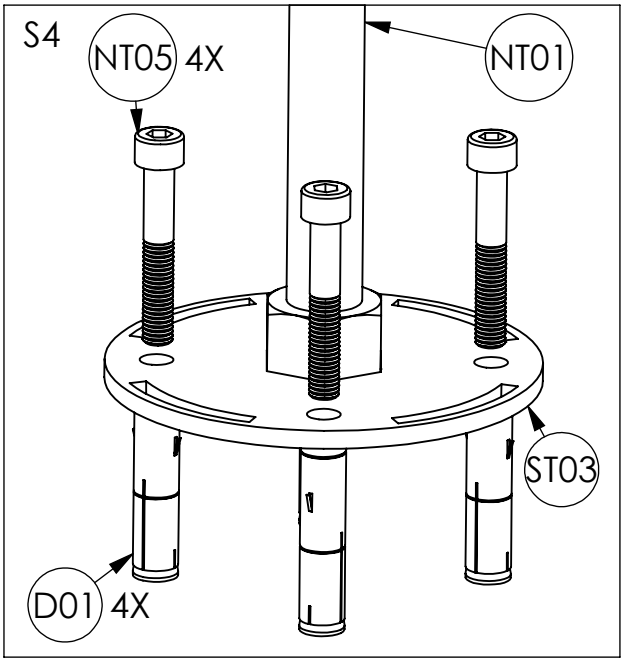
NT05 4X
NT01
ST03
D01 4X

3

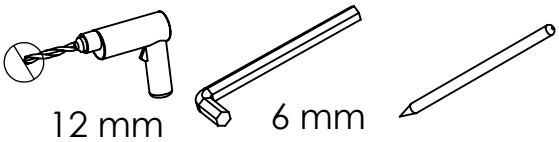
12 mm
6 mm

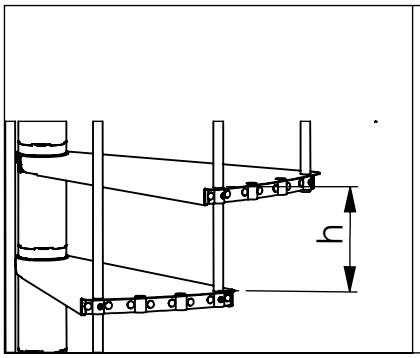

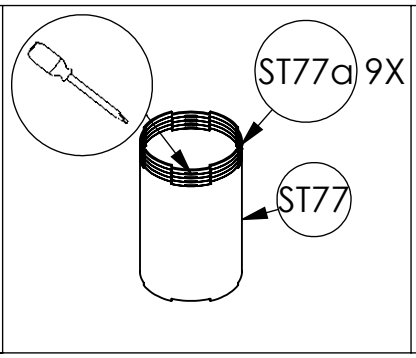

h	ST77a
190 mm	0x
195 mm	1x
200 mm	2x
205 mm	3x
210 mm	4x
215 mm	5x
220 mm	6x
225 mm	7x
230 mm	8x
235 mm	9x

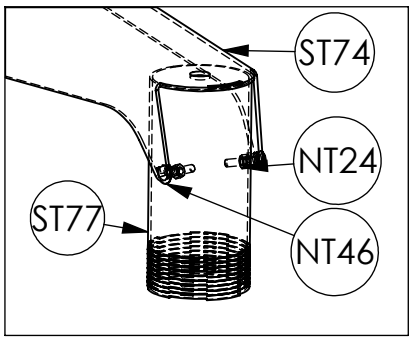

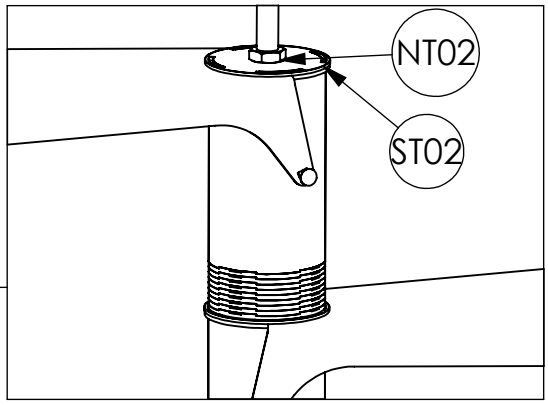

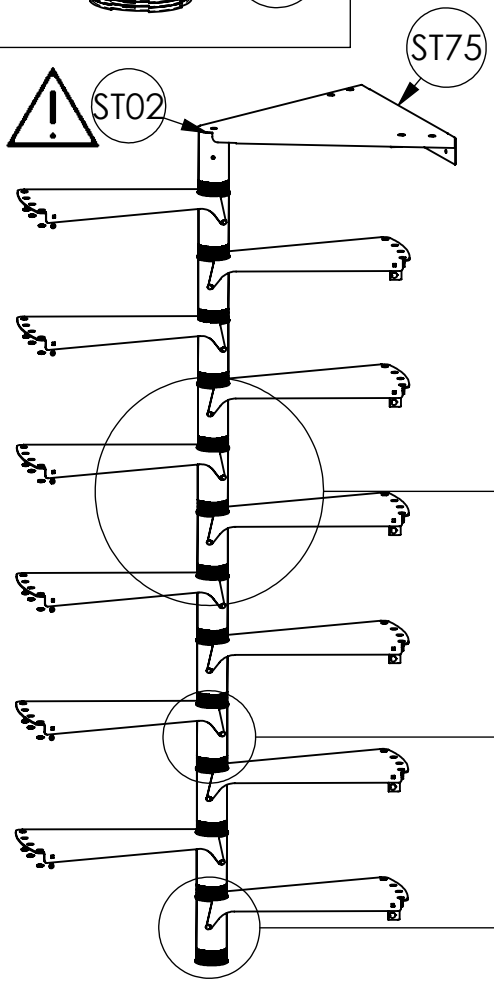

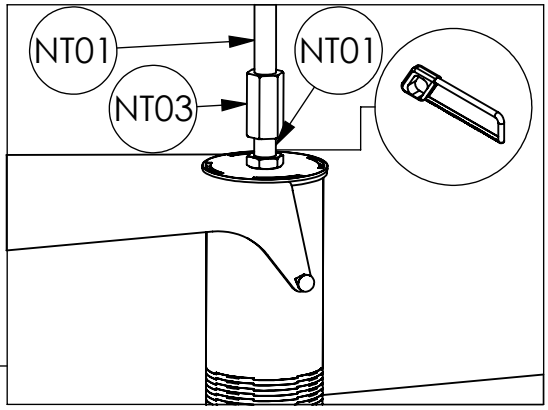

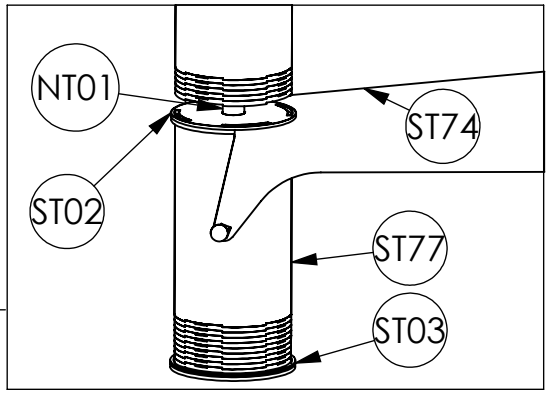

4

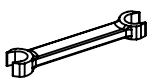

30 mm



13 mm

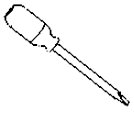

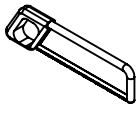

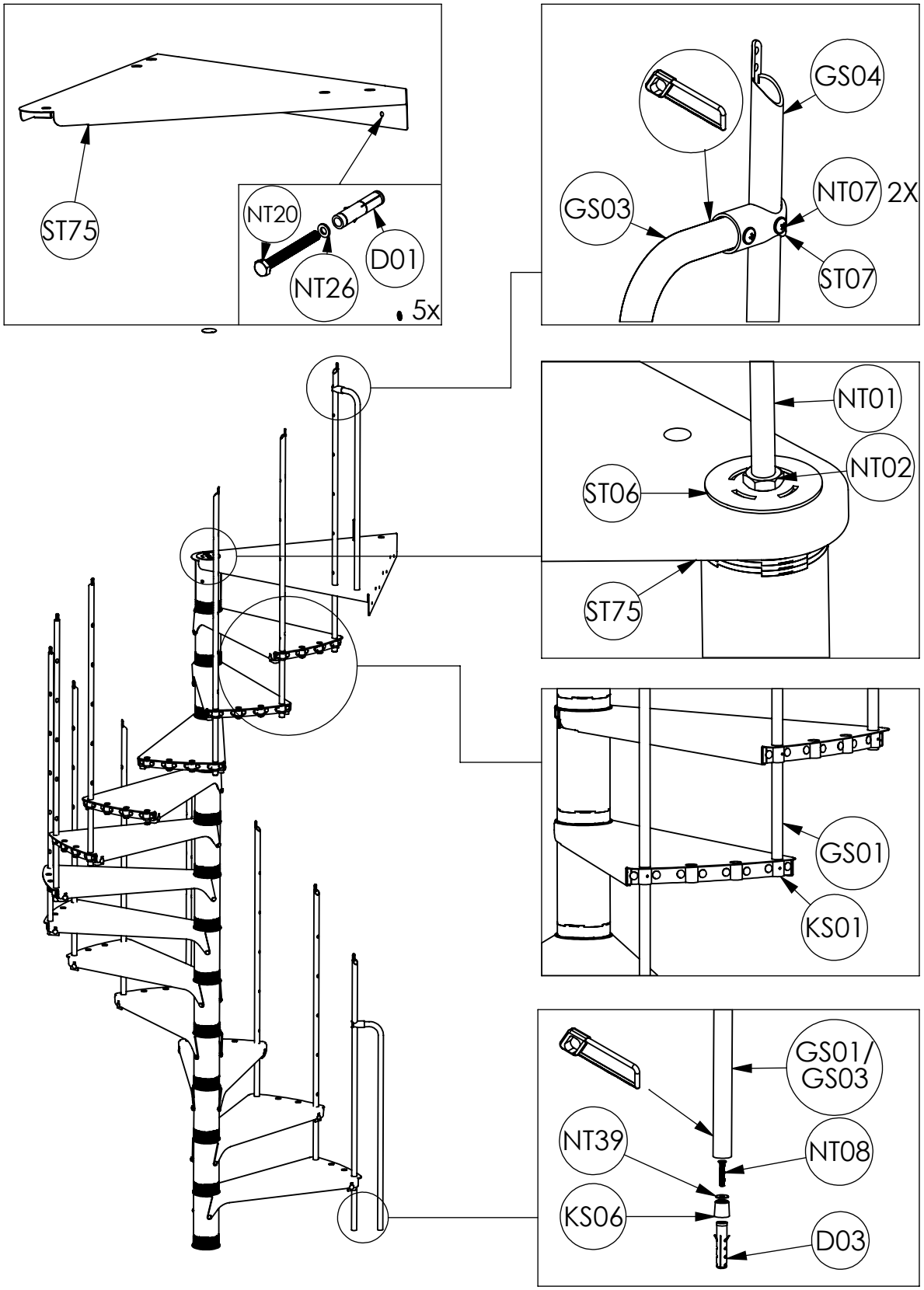
ST75
NT20
D01
NT26
5x
GS04
GS03
NT07 2X
ST07
NT01
NT02
ST06
ST75
GS01
KS01
GS01/
GS03
NT39
NT08
KS06
D03

5

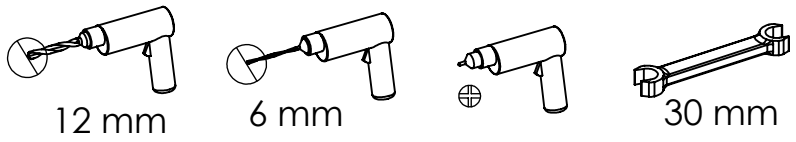
12 mm
6 mm
30 mm

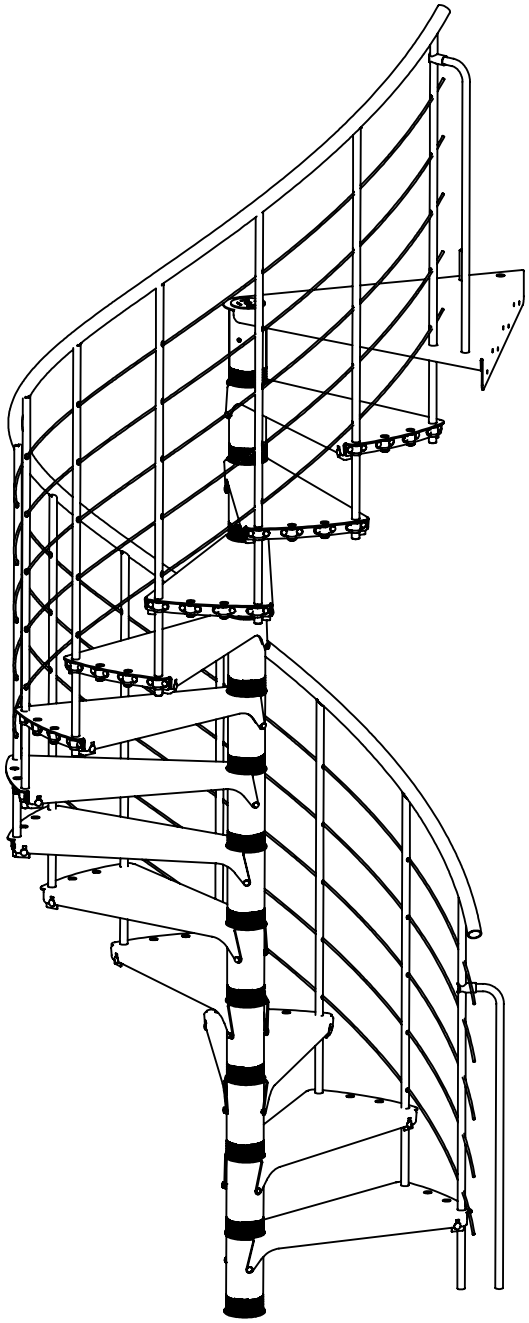

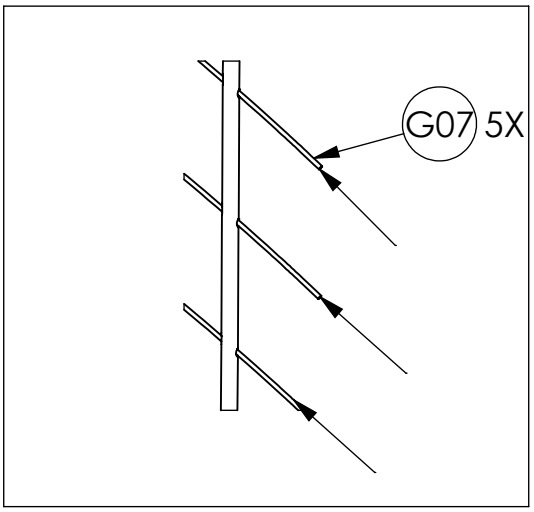

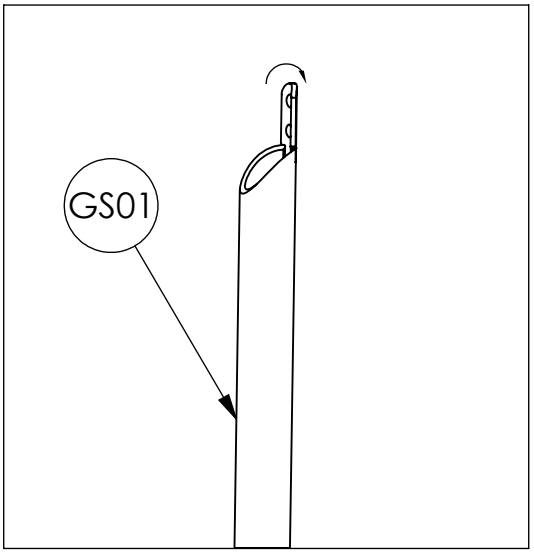

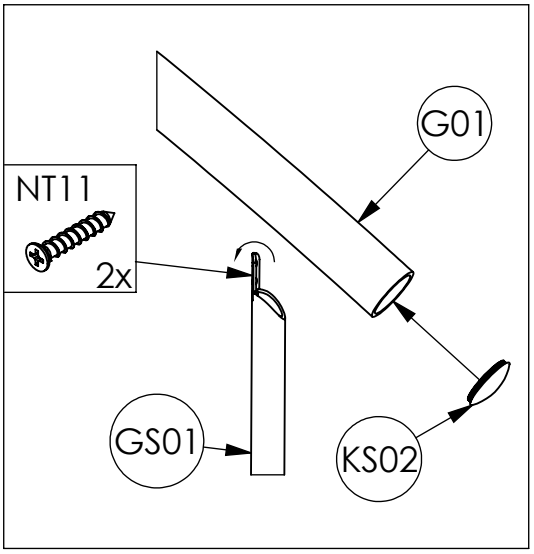

6

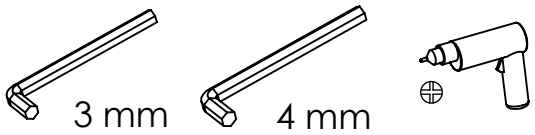

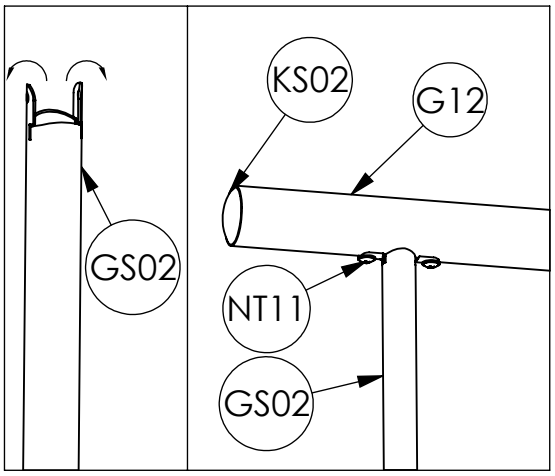
KS02
G12
GS02
NT11
GS02

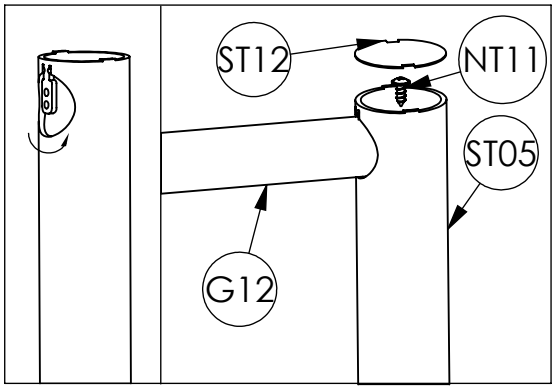
ST12
NT11
ST05
G12

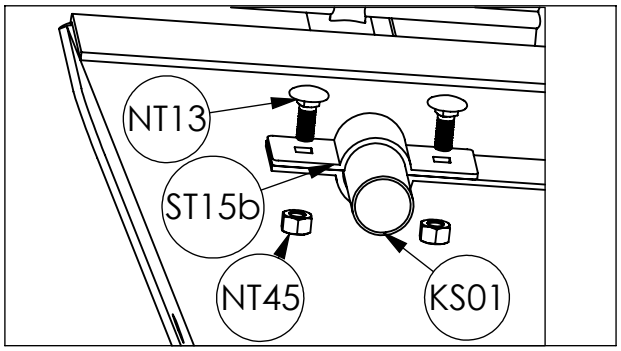
NT13
ST15b
NT45
KS01

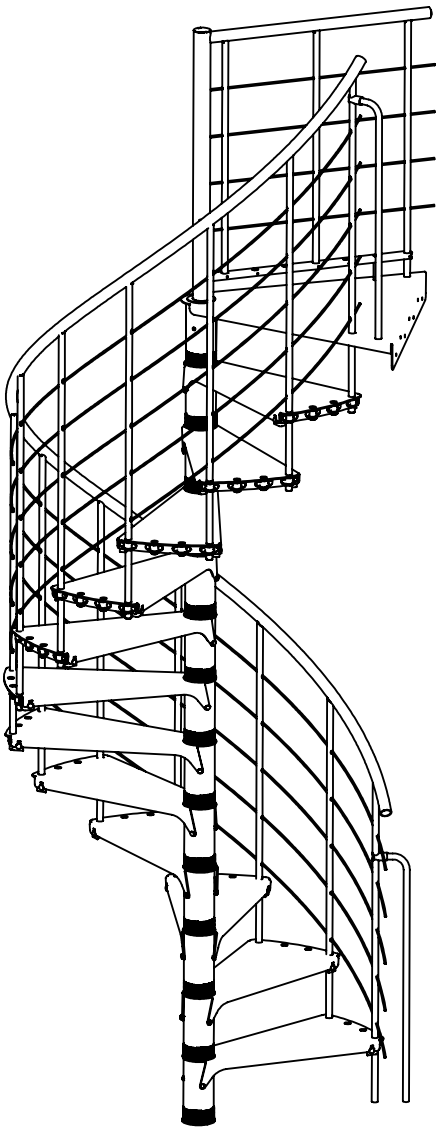

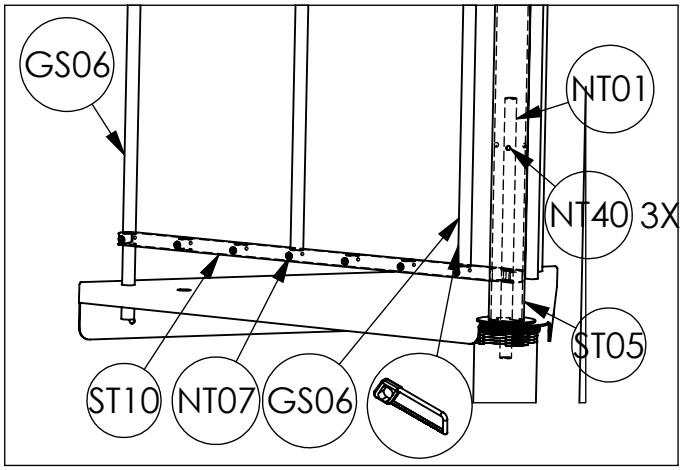
GS06
NT01
NT40 3X
ST05
ST10
NT07
GS06

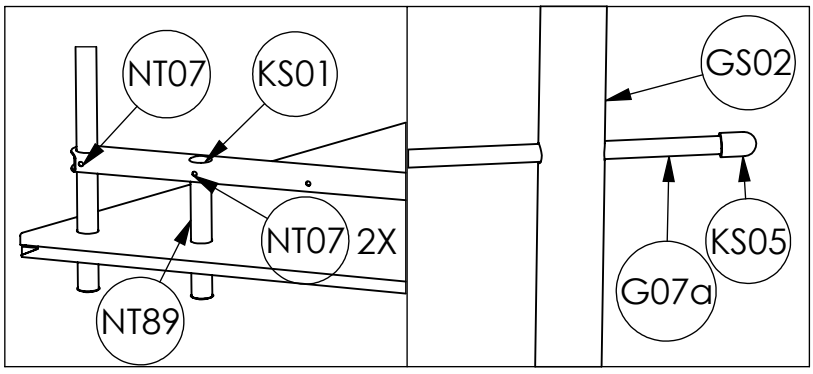
NT07
KS01
NT07 2X
NT89
GS02
KS05
G07a

7

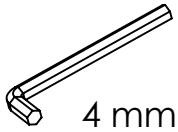
4 mm

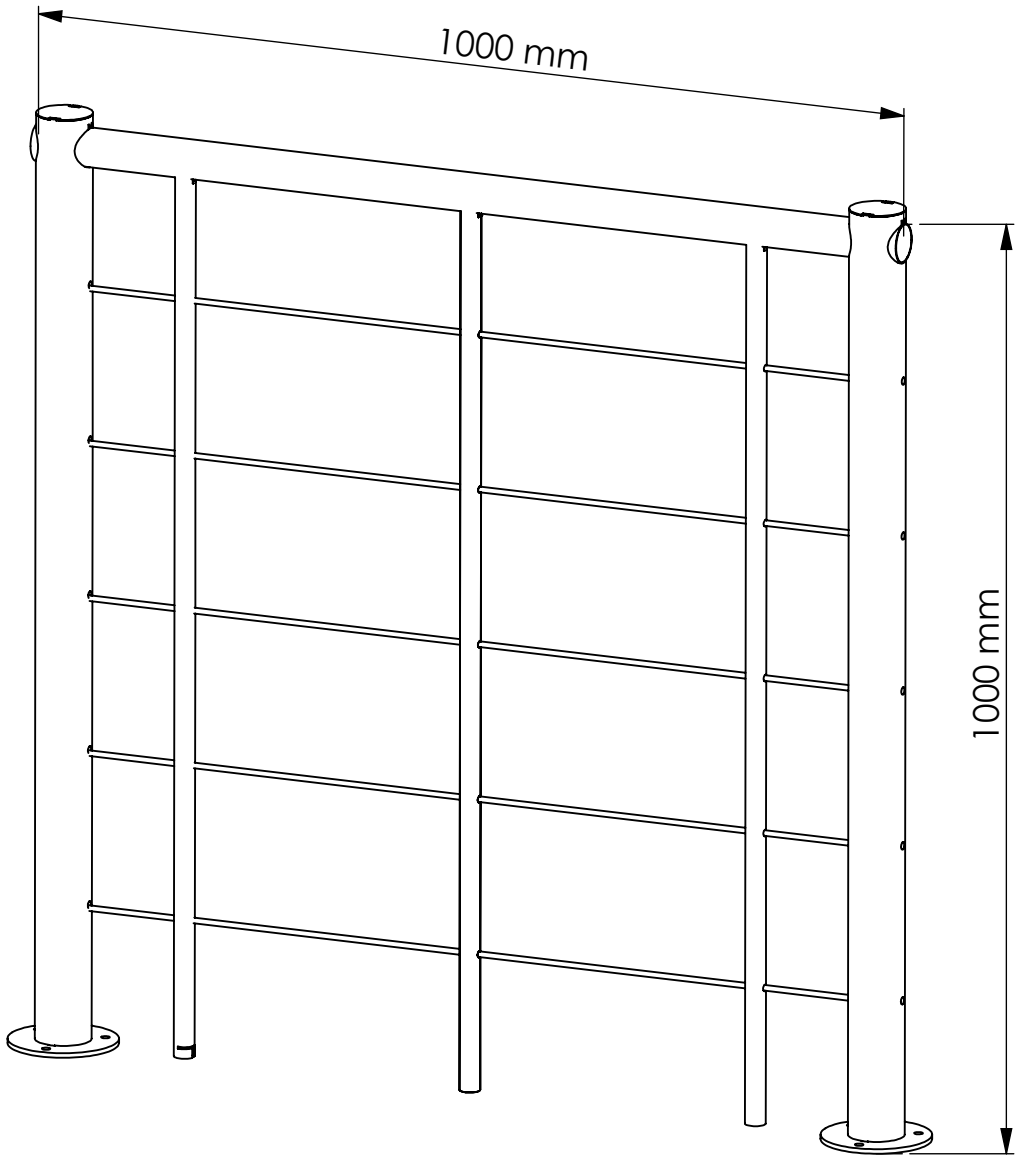
1000 mm
1000 mm

ST12

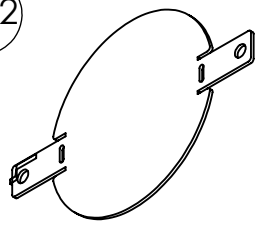

∅ 60 mm

2x

ST54

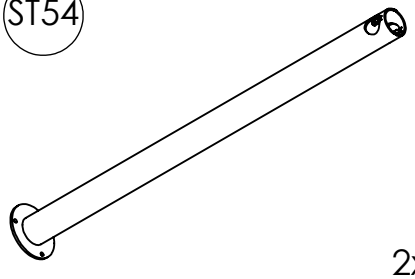

2x

G12

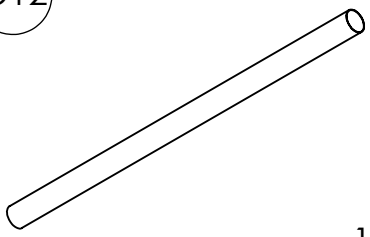

∅ 40x1000mm

1x

G13

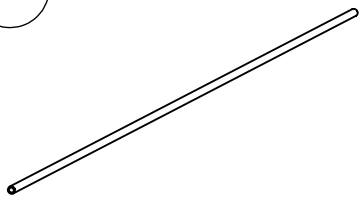

∅ 6x1x1000mm

5x

GS19

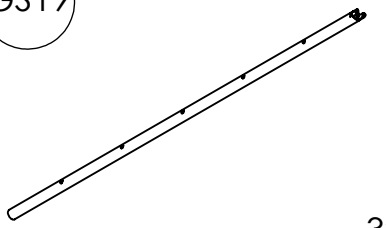

∅ 22x1,65x978mm

3x

KS02

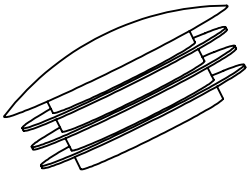

∅ 40 mm

2x

D01

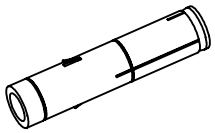

∅ 12 mm

6x

D03

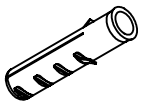

∅ 8 mm

3x

NT11

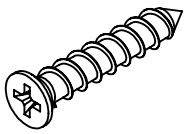

∅ 4 x 25mm

10x

NT19

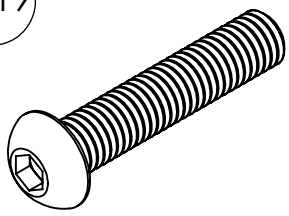

M8 x 60mm

6x

NT26

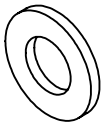

M8 DIN125

6x

NT48



M6

3x

NT49

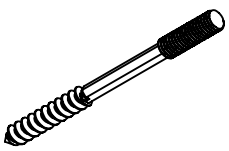

M6

3x

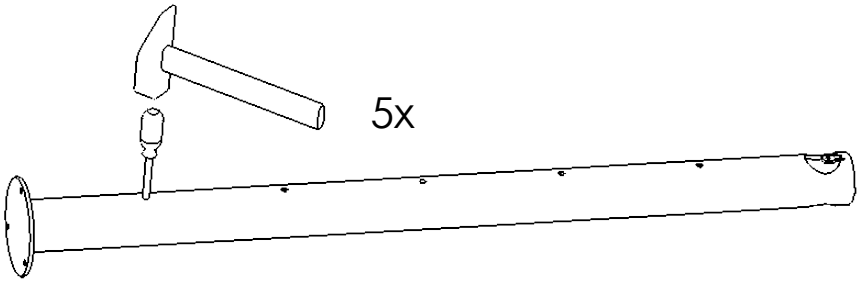

5x

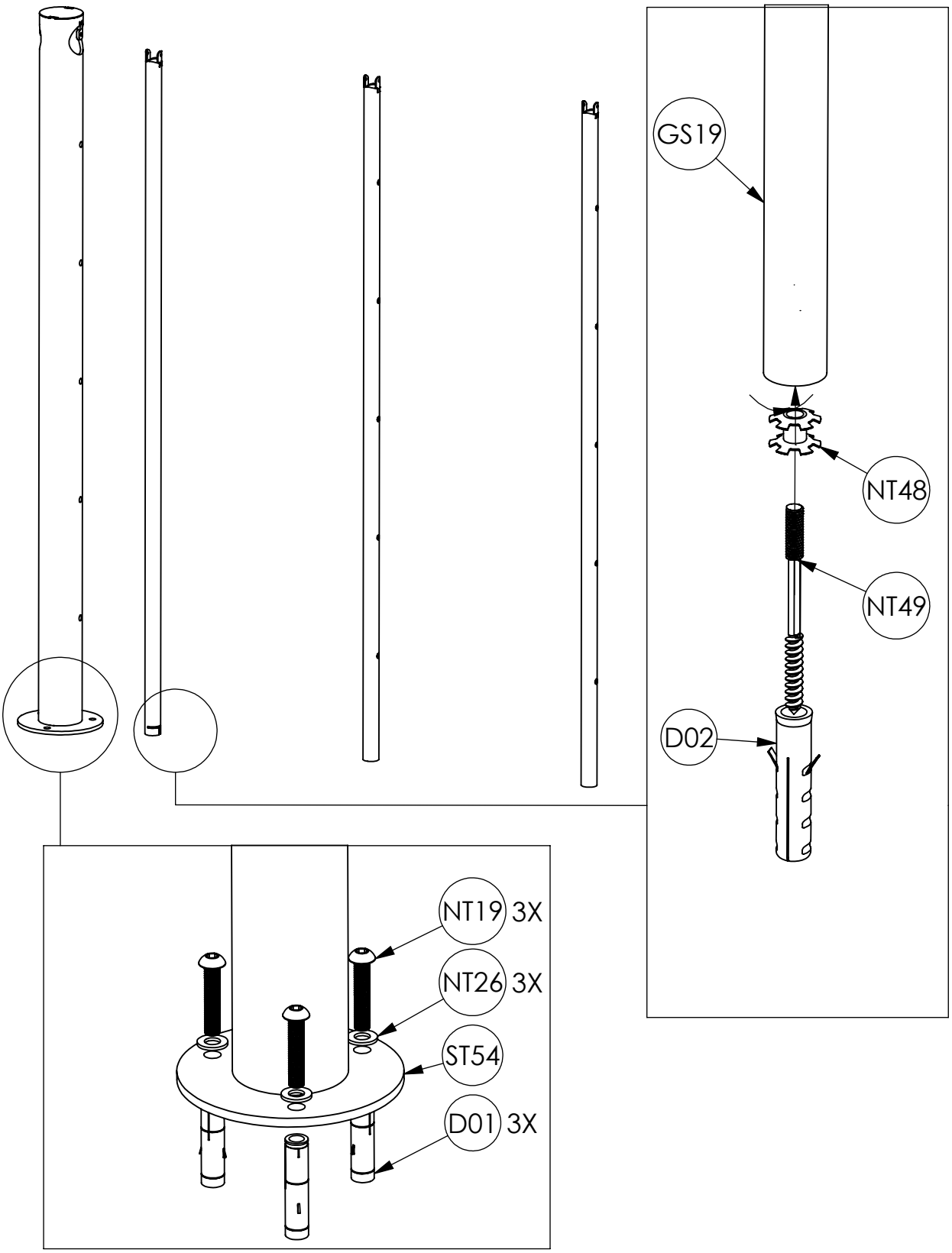

3

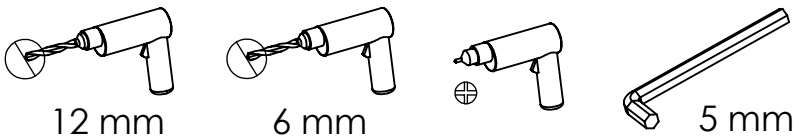

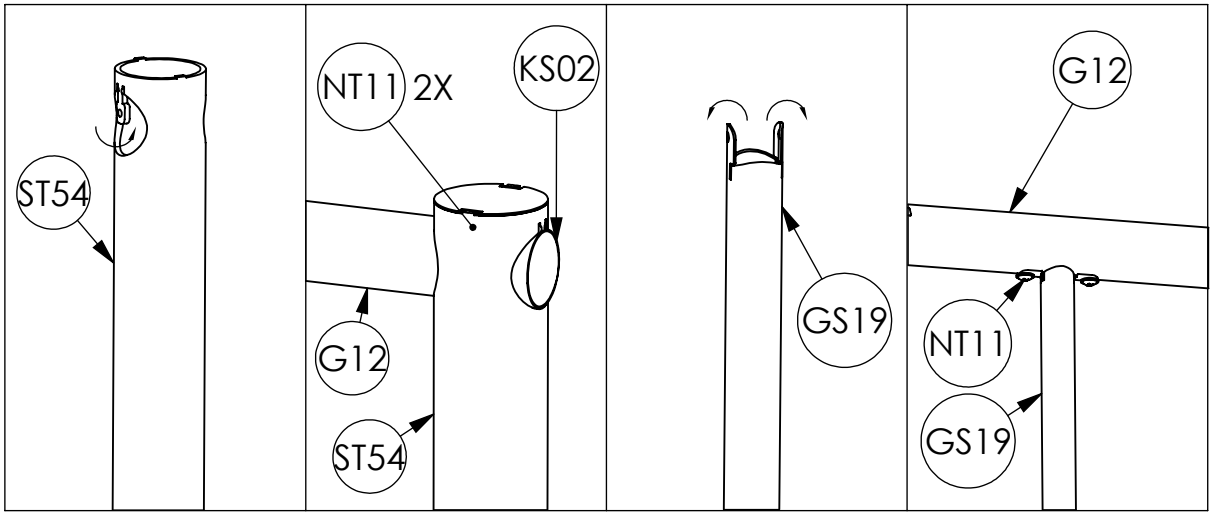

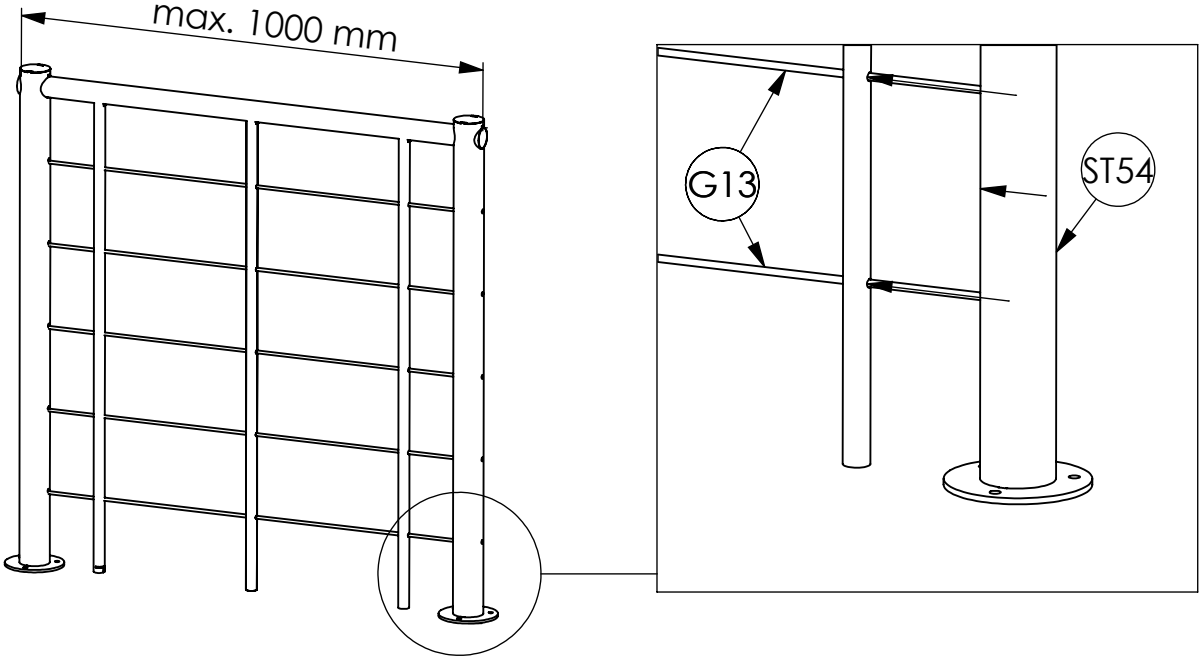

POSSIBILITY:

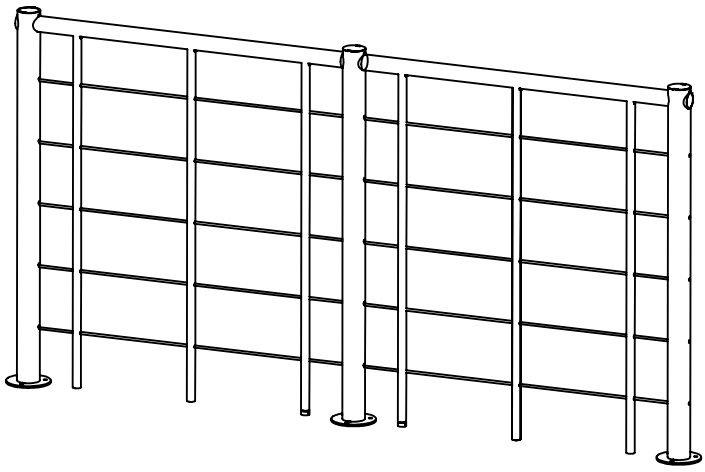

4

